MODEL #: 203-FR08-01

8 INCH (203 MM) 8 OHM, SINGLE DRIVER LOUDSPEAKER

PART #: 93087

From well-constructed melodies to simple riffs and chords, music has the potential to fuse into your most cherished memories and relationships. You deserve a listening experience faithful to the original recording, without unwanted acoustic distortions or mechanical distractions. For this reason, we designed the 93087, a unique full-range loudspeaker created to reproduce music with accuracy for high-end, single transducer systems without cross-over requirements.

To reach true fidelity, MISCO designed the 93087 with a sensitivity of 94 dB SPL, an exotic banana pulp, dual cone whizzer, a cotton spider for optimized dispersion and damping capacities, and an EBP rating of 98 – making this driver ideal for vented enclosures. With this driver, we guarantee trustworthy, reliable sound for your next home-audio project.

Oaktron by MISCO is a premium line of high performance, ready-to-ship transducers and drivers for a wide variety of applications. From elegantly simple to highly specialized designs for unique and demanding applications, there is an *Oaktron* loudspeaker perfectly suited for your needs.



Primary Specifications

Size, Nominal (inch & mm)	8" (203 mm)
Rated Impedance (Ω)	8
Continuous Power (W)	30
Sensitivity (dB SPL) [1]	94
Frequency Range (Hz)	45 - 15, 000
Resonant Frequency (Fs) (Hz) +/- 15%	52

©2026 MISCO/Minneapolis Speaker Company Inc.

OAKTRON by MISCO

MODEL #: 203-FR08-01

8 INCH (203 MM) 8 OHM, SINGLE DRIVER LOUDSPEAKER

PART #: 93087

More Specifications

Application	High-End Audio and Home Theater
RoHS Compliant	Yes
DC Resistance (Re) (Ω)	6.0
Program Power (W)	60
Continuous Power (W)	30

Small Signal Parameters

Nominal Impedance (Z) (Ω)	8
DC Resistance (Re) (Ω)	6.0
Voice Coil Inductance (Le) (mH)	0.38
Resonant Frequency (Fs) (Hz) +/- 15%	52
Mechanical Q Factor (Qms)	3.42
Electrical Q Factor (Qes)	0.53
Total Q Factor (Qts)	0.46
Moving Mass (Mms) (gm)	10.9
Suspension Compliance (Cms) (mm/N)	0.85
Mechanical Resistance (Rms) (kg/s)	1.05
Surface Area of Diaphragm (Sd) (cm^2)	221.7
Compliance Equivalent Volume (Vas) (L)	59.05
Maximum Linear Excursion (Xmax) (mm)	1.8
Coil Winding Height (mm)	9.9
Magnetic Gap Height (mm)	6.3
Motor Force Factor (BL) (T•M)	6.4
Efficiency (η_0) (%)	1.55
Efficiency Bandwidth Product (EBP) (Fs/Qes)	98.5

Material Descriptions

Basket Type	Aluminum
Terminal Size (mm)	6.4 x 0.8 mm / 4.7 x 0.5 mm
Voice Coil Diameter (mm)	25.81
Voice Coil Wire Material	Copper clad aluminum
Voice Coil Former Material	Kapton
Magnet Material	Ferrite
Magnet Weight (g)	567
Cone Body Material	Paper
Cone Surround Material	Treated cloth

©2026 MISCO/Minneapolis Speaker Company Inc.

Spider Material	Treated cloth
Dust Cap Material	Paper
Net Weight (kg)	1



©2026 MISCO/Minneapolis Speaker Company Inc.

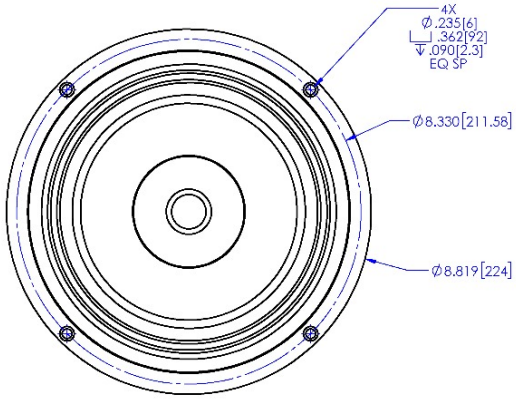

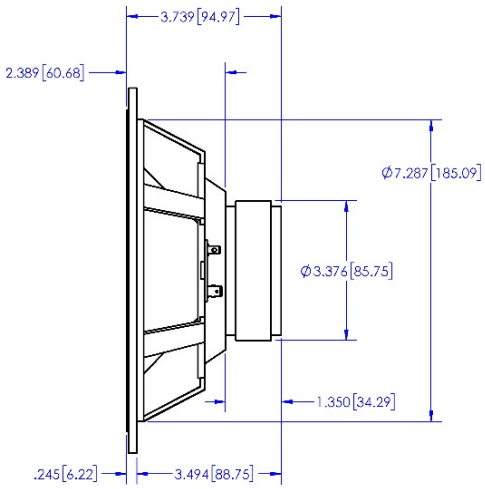

MODEL: 203-FR08-01 P/N: 93087

©2026 MISCO/Minneapolis Speaker Company Inc.